Installation Instructions

DXAH

Heat/Cool refrigerant air handlers
with high efficiency EC motor
for heat pumps

45 Cowansview Rd.
Cambridge, Ontario
N1R 7L2

Phone: 888-781-8151
Fax: 888-670-2544
info@vortexsource.com
www.vortexsource.com

Table of Contents

IMPORTANT NOTES FOR THE INSTALLER **3**

TYPICAL PLUMBING CONNECTIONS **4**

ELECTRICAL WIRING DIAGRAM **5**

INTRODUCTION **7**

HOW IT WORKS **7**

COOLING 7
HEAT PUMP HEATING 7
CONTINUOUS FAN 7
AUXILIARY HEAT 8

PRODUCT DESCRIPTION **8**

CABINET 8
FAN AND MOTOR 8
WATER COILS (OPTIONAL) 8

EQUIPMENT SELECTION AND SIZING **8**

HEAT LOSS 9
AIR HANDLER SELECTION 9
DUCT LAYOUT 9

INSTALLATION **10**

AIR HANDLER MOUNTING 10
DUCTWORK 10
AUXILIARY ELECTRIC HEATER 11
AUXILIARY HOT WATER COIL 11
RISK OF FREEZING 11

ELECTRICAL **12**

HEAT PUMP 12
THERMOSTAT 12

Airflows in cfm – subject to change without notice, refer to inside door or blower of air handler. **13**

START-UP PROCEDURES **14**

SERVICE AND MAINTENANCE **14**

TROUBLESHOOTING **15**

THERMOSTAT CALL ERROR 15
IMPROPER OPERATION/FAN SPEED 15
AUXILIARY PUMP DOES NOT RUN 15
PUMP IS NOISY AT START-UP 15
INSUFFICIENT OR NO HEATING OR COOLING 15
AUXILIARY HEATING DURING STANDBY MODE ..... **ERROR! BOOKMARK NOT DEFINED.**
MOTOR "THUMPS" ON START-UP 15

SERVICE TIPS **16**

AUXILIARY PUMP REPLACEMENT 16
CHECK VALVE REPLACEMENT 16
COIL REPLACEMENT 16
MOTOR REPLACEMENT 16

HPAH AIR HANDLER PARTS & ACCESSORY LIST **17**

PRODUCT WARRANTY **18**

IMPORTANT NOTES FOR THE INSTALLER

☑	**A Quick Check List**
☐	Are the water connections oriented in a way to avoid trapping air in the heating circuit?
☐	Is the purge valve installed on the return line from the air handler upstream from the isolation valve?
☐	Is the air handler hung and isolated to avoid transmitting vibration through framing and duct work?
☐	Are the isolation valves full-port? Restrictive valves will limit performance.
☐	Are Thermostat connections correct, including cooling and continuous run connections?
☐	Have the packing materials been removed from the blower and the pump ?
☐	Is there an installation manual for the home owner ?
☐	Is the unit accessible? Are there clearances for service and component replacement?
☐	Are the supply plenum and return duct/drop acoustically lined ? (at least 6' of the return duct/drop must be lined in addition to the supply plenum)
☐	Is the filter cover in place? Is a clean filter in place? Is the supplied filter rack installed?

TYPICAL PLUMBING CONNECTIONS

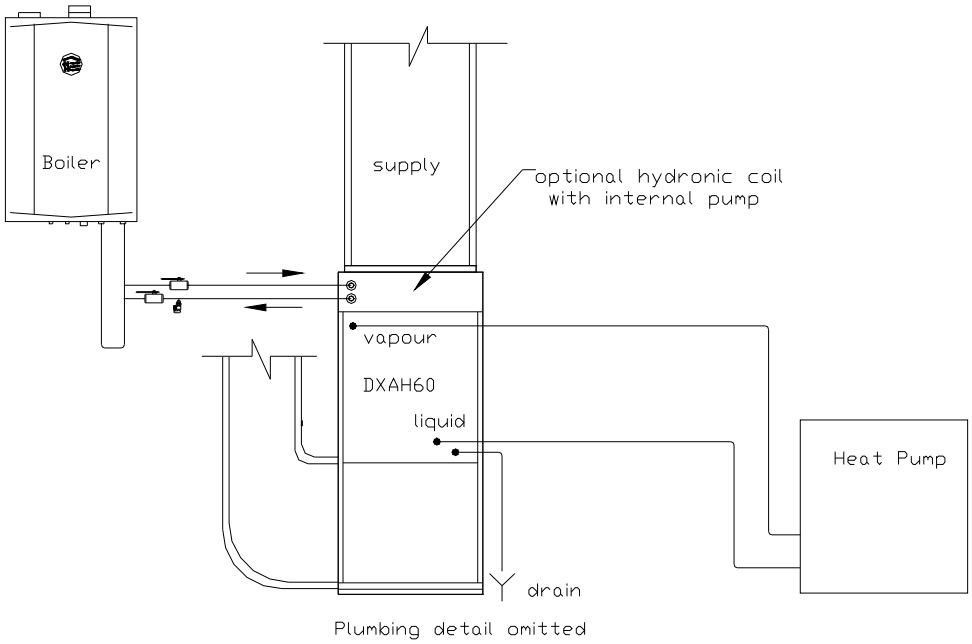

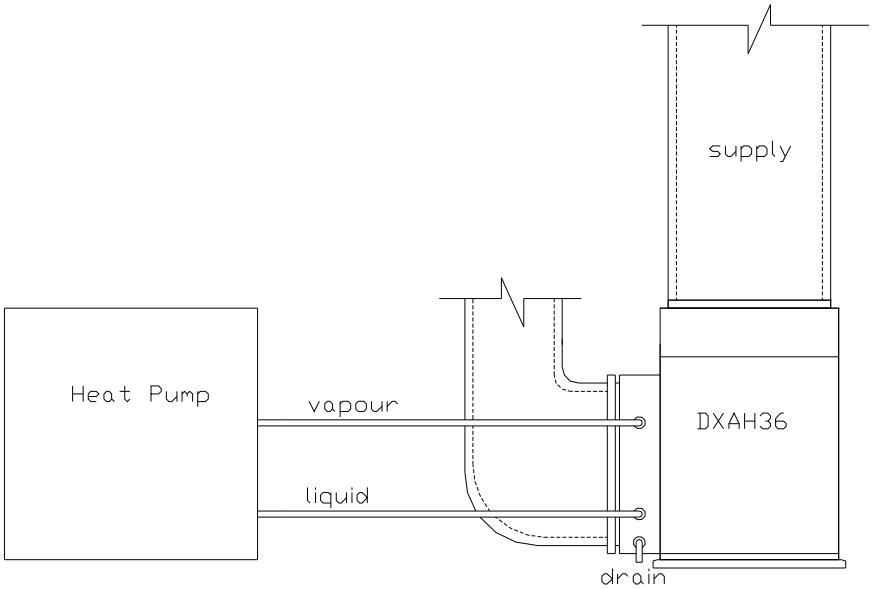

ELECTRICAL WIRING DIAGRAM

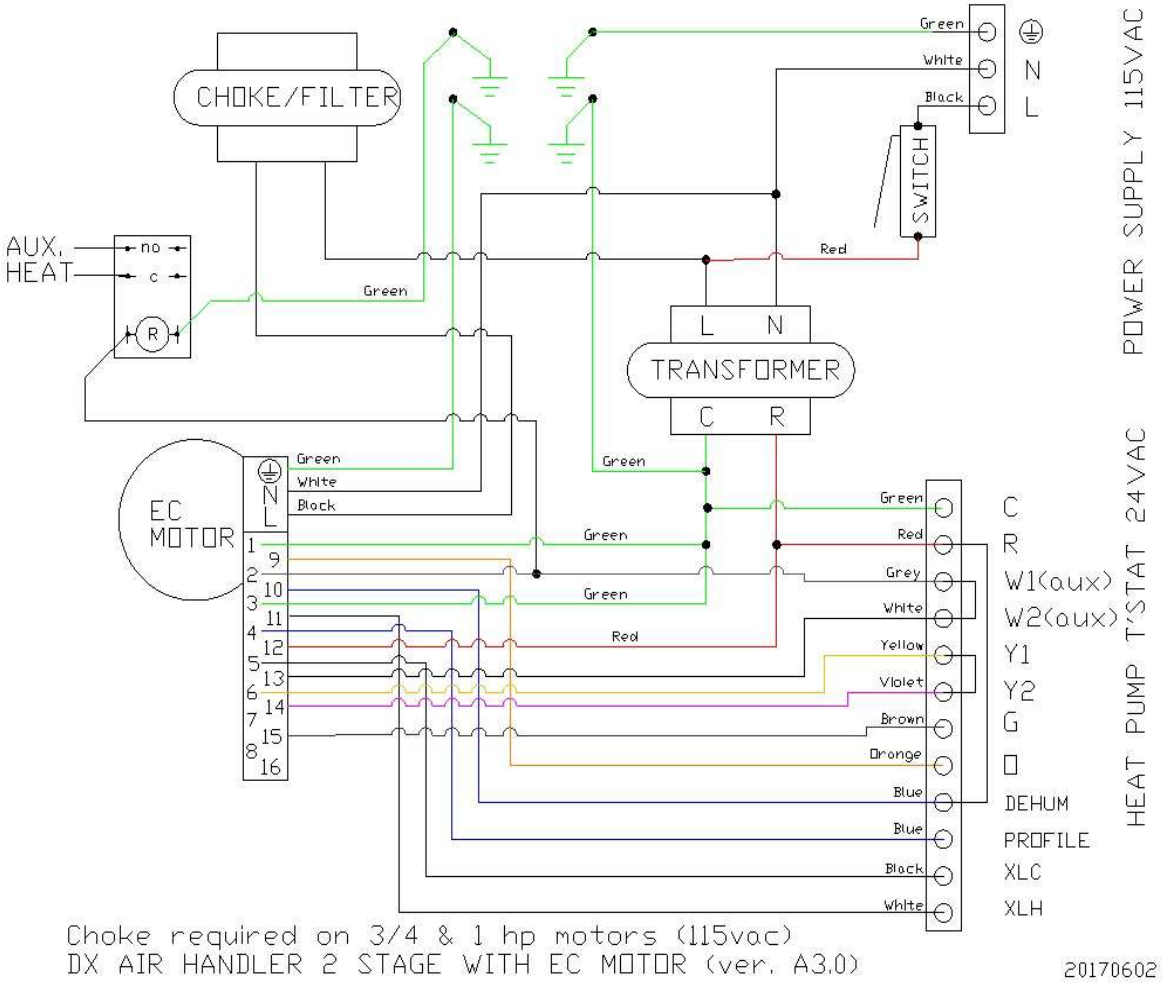

EC Motor Control Wires		
Wire Number	Typical Colour	Function
1	Green/Yel.	C1 Ground
2	White	W1 (Low Aux. Heating Speed)
3	Green/Yel.	C2 Ground
4	Blue	Profile (fan speed profile)
5	Black	XLC – Extra Low Cooling
6	Yellow	Y1 (Low Heat Pump Speed)
7	N/A	
8	N/A	
9	Orange	O (Heat pump cooling speed)
10	Blue	DEHUM (OFF for dehumidification)
11	White	XLH – Extra Low Heating
12	Red	R (24VAC Power)
13	White	W2 (High Aux. Heating Speed - default)
14	Violet	Y2 (Medium Heat Pump Speed)*
15	Brown	G (Continuous Fan Speed)
16	N/A	

Physical Properties

120 volt, 1 ph., less than 12 amps

Catalogue No.		Cabinet dimensions			Supply air	Return air	Shipping info.	
		w	d	h			weight	Dimensions
DXAH18 DXAH24	fan box	14”	20”	24.3”	12”x16”	14”x18”	70 lb.	16”x23”x27”
	slab coil	5”	23”	18”	12”x16”	14”x18”	22 lb.	6”x15”x24”
DXAH36	fan box	22”	25”	31.5”	20”x20”	18”x23”	90 lb.	23”x28”x35”
	slab coil	5”	26”	22”	20”x20”	18”x23”	32 lb.	6”x23”x26”
DXAH60 DXAH72	integral A coil	22”	25”	53.3”	20”x20”	18”x23”	120 lb.	23”x25”x55”

Unit Specifications: DXAH air handlers

MODEL:	**DXAH18**	**DXAH24**	**DXAH36**	**DXAH60**	**DXAH72**
Maximum Airflow (CFM)	600	800	1200	2000	2400
Max. External Static Press. (in.w.c.)	1.2	1.3	0.5	0.5	0.5
Heating Capacity (Btu/hr.)	18,000	24,000	36,000	60,000	72,000
Cooling Capacity (Tons)	1.5	2.0	3.0	5.0	6.0
Blower Motor Full Load (Amps)	5.5	5.5	5.5	9.6	10.3
Auxiliary Heating Capacity with optional water coil					
Heating Capacity (Btu/h) 140F	800	800	1200	1800	2200
Heating Capacity (Btu/h) 160F	30,000	30,000	63,000	80,000	80,000
Heating Capacity (Btu/h) 180F	37,000	37,000	80,000	103,000	103,000
Water Flow (usgpm)	48,000	48,000	99,000	125,000	125,000
Circulator Full Load (Amps)	3.0	3.0	4.8	4.8	4.8

INTRODUCTION

DXAH™ air handlers are designed for use with heat pumps with direct connection of the refrigerant lines to the air handler.

DXAH™ air handlers can be quickly sized using the quick sizing information in our spec sheets. For applications requiring special consideration, call Vortex for answers to questions related to sizing, installation or trouble-shooting for any Vortex air handlers or heat pumps.

DXAH™ air handlers are intended for conventional duct systems. **DXAH™** air handlers can also use small diameter **small-D™** duct systems which operate at higher static pressure. Contact Vortex for performance ratings at higher static pressures and lower airflows. Refer to the **small-D™** design manual for more details on duct design and installation.

HOW IT WORKS

Cooling

In a typical installation, a call for cooling will bring on the air handler and heat pump. The fan will slowly ramp up (15 seconds) to speed and continue until the call is satisfied. A heat pump thermostat is required to energize Y & O to select the proper airflow and send the proper cooling signal to the heat pump.

Dehumidification:

If an optional dehumidisat is installed in the home, it can be interlocked to the air handler. When installed, the air handler can run at a lower speed to increase the dehumidification during a cooling call. Refer to the wiring diagram for connection details.

Cooling Fan Speed Selection:

The installer can select one of several (up to 12) speeds that the air handler will operate at during cooling mode.

Heat Pump Heating

In a typical installation, a call for heating is similar to a cooling call. It will bring on the air handler and heat pump. The fan will slowly ramp up (15 seconds) to speed and continue until the call is satisfied. A heat pump thermostat is required to energize Y to select the proper airflow and send the proper heating signal to the heat pump.

The alternate profile is not recommended for single capacity DX systems.

For single stage heat pumps, use Y1 or Y2 or Y1&Y2 jumpered together to select the desired airflow/tonnage. For 2 stage heat pumps, energize Y1 to bring on first stage and Y1&Y2 together to bring on second stage.

Continuous Fan

When the thermostat fan switch is set to continuous fan, the fan will run at low speed (70% of medium cooling speed). When there is a call for heating or cooling, the normal heating or cooling

speed will over-ride the continuous fan setting. Once the thermostat is satisfied, continuous fan speed will resume.

Auxiliary Heat

Auxiliary or emergency heating is activated through W1 or W2 which over-ride all other thermostat calls. For W1 only, remove the jumper. The standard dxah comes with an isolation relay (dry contact) to activate electric resistance heating. It can also be ordered pre-wired for an external or internal pump for hydronic aux. heating.

PRODUCT DESCRIPTION

Vortex air handlers are in conformity with the following standards:

CAN CSA-22.2 No. 236M95

UL 1995 2nd Ed.

Cabinet

All cabinets have a tough, durable low maintenance pre-painted finish.

Cabinet dimensions are designed to provide maximum installation flexibility. Refer to installation requirements for more details.

Fan and Motor

All fans are wide body dynamically balanced for extra quiet operation.

Multi-directional sleeve bearing motors allow mounting in any direction for maximum installation flexibility.

Water Coils *(optional)*

All water coils are potable water grade copper suitable for use in plumbing systems. No lead solder is used in any component construction. All coils and internal piping conform to ASTM B68 or ASTM B88 standards.

High-density aluminum fins provide maximum heat transfer for small coil surface.

Pump with check valve is standard with the coil.

EQUIPMENT SELECTION AND SIZING

Proper sizing of system components is crucial for proper operation.

Steps for sizing and selection:

1) Obtain room by room heat loss and/or heat gain
2) Determine hot/cold water temperature
3) Select air handler from specification sheet
5) Determine duct layout

Heat Loss

Make sure a proper room-by-room heat loss and heat gain for the dwelling is calculated using HRAI, ASHRAE or other approved sizing method.

Air Handler Selection

Select the desired air system that will meet 100%-140% of the heating load and 80%-120% of the cooling load.

Note: Heat pump sizing guidelines may recommend a heat pump that only meets a portion of the heating load. Select an air handler which can deliver at least 100% of this capacity. Size the auxiliary heating coil (water or electric) to meet the remaining or total heat load as per heat pump sizing instructions.

For water based auxiliary heating, select a boiler or water heater and water temperature according to manufacturer's guidelines or contact Vortex for sizing details.

Duct Layout

Make sure a proper duct design has been completed for the dwelling using HRAI, ASHRAE or other approved design method. For a small diameter duct system, refer to the **Vortex small-D**™ design manual.

Supply air Plenum

Provide an acoustically insulated supply air plenum that is the same dimensions as the outlet flanges of the air handler.

A smooth, square-to-round transition may be used in place of the supply air plenum for horizontal installations where there is only one supply main.

Plenum takeoffs may be mounted on the end of the plenum or the sides of the plenum, but not both. Spin-in collars or transition takeoffs may be used, but not both.

Supply mains

Plan duct layout to avoid branch runs in outside walls or attics and to minimize the length of the main duct

Where practical, provide parallel main ducts to various floors or zones rather than running a single larger duct with tees. For applications with 3 or more floors or any application where a large seasonal adjustment in airflow is anticipated, parallel main supply ducts must be used. Volume dampers in each of the main supply ducts must be installed and must be accessible for seasonal adjustments. For example; a 4-storey townhouse will probably require vastly different airflow rates for the upper floors between cooling and heating seasons. If there are two main supply trunks, the supply trunk serving the upper 2 floors can be damped down in the heating season to better balance the air flows.

Supply mains may be round duct or equivalent rectangular duct.

Round duct can be spiral duct, welded or snap lock seams.

Rectangular duct must be at least 26 gauge for all dimensions. The aspect ratio for square ducts (wide dimension over short dimension) shall not exceed 2.5 to1.

Return air duct

The return air duct or drop must be acoustically insulated for at least 6 feet nearest the air handler. The return air duct should be sized for a total pressure drop of not more than 0.15"w.c. Using conventional sizing methods and

installed in accordance with HRAI guidelines or equal.

Refer to the **small-D™** design guide for additional requirements for small diameter/higher static duct applications.

INSTALLATION

The installer must adhere strictly to all local and national code requirements pertaining to the installation of this equipment.

Detailed instructions are shipped with all accessory items and should be followed in detail.

Air Handler Mounting

The **Vortex** air handler can be installed in any direction. The air handler can be floor mounted or hung from straps. Some precautions must be observed for some of the possible mounting positions.

DXAH60 and DXAH72 – The factory default configuration is upflow. Downflow or horizontal must be special ordered from the factory.

DXAH18/24 and DXAH36 – All models can be field configured upflow, downflow or horizontal with no modifications. For upflow and downflow, install the cased slab coil on the return air; left or right (or rear on DXAH36). **Install on a pad or above the floor to allow for a condensate drain.** For horizontal, install the cased slab coil on the supply discharge of the air handler using S-cleats.

The air handler can be hung by securing straps through any of the existing screw holes in the cabinet. When the existing screw is too short for securing a mounting strap, a longer screw can be used provided care is taken not to damage any internal components. When fastening straps using screws other than those supplied with the cabinet, special care should be taken in the vicinity of the coil to avoid tube puncture.

3/4” screws can be safely installed on either side of the coil.

Warning!: Do not put screws into the cabinet directly in front of and behind the coil (top or sides).

The cabinet is designed so that the return air can be located on either side of the cabinet, through the bottom of the cabinet, or from the back. Position the filter rack so that the filter is readily accessible.

Install the air handler with the door firmly screwed in place to make sure the cabinet remains square.

Provide at least 2 feet (0.75 metres) of service clearance in front of the access panel of the air handler. Zero clearance is acceptable on all other faces.

Ductwork

General

Ductwork installed in unheated spaces such as attics must be installed between the insulation and the heated space.

Provide at least R-12 of insulation above ducts. The branch and trunk lines must be insulated and sealed with a vapour barrier prior to applying house insulation.

If a fresh air duct is required, make connection to return air plenum at least 6 feet (2m) upstream from filter. Insulate all fresh air ducts.

Supply Ductwork

Supply trunks may be square or round. SEAL all joints and seams with metal tape or sealing compound. Volume dampers for each of the main supply trunks must be accessible for balancing. (Near the supply plenum is preferred)

Locate outlets at least 6 inches (150mm) from outside walls or window coverings.

Return Ductwork

Return air plenum should be the same cross sectional area as the air handler return air opening. In vertical installations, a conventional return airdrop and elbow is acceptable. The return duct /drop must be acoustically lined for 6 feet (2m) nearest the air handler.

Drain

Connect a suitable condensate drain and trap. The drain connection is 7/8”OD (3/4”nominal) copper. The trap should be at least 2” in height and serviceable for future cleaning. Avoid using soft vinyl tubing unless care is taken to lay the tube flat and avoid the formation of multiple water traps. Traps should not be located in areas that may freeze such as attics.

Auxiliary Electric Heater

Refer to specifications, wiring diagram and local codes for wire sizes, disconnect requirements and circuit breaker size.

Auxiliary Hot Water Coil

Connect to a suitably sized boiler or water heater. The auxiliary coil contains only plumbing-grade materials and is suitable for connections to a domestic water heater. Refer to the Vortex air handler installation and sizing guide for additional sizing details.

Refer to the boiler/water heater installation manual for acceptable pipe materials. Generally, any material acceptable for use with the boiler may be connected to the air handler: pex, PE, copper or steel. If ferrous (steel/iron) pipe is used, suitable corrosion protection is required. The air handler contains no ferrous materials that come in contact with the water.

Maximum allowable pressure is 150psi (1Mpa); maximum allowable temperature is 180F (82C).

Isolation valves and a drain valve between the water outlet and isolation valve are recommended for servicing.

Risk of Freezing

Steps must be taken to prevent the water coil(s) from freezing. Coils that have failed due to freezing and damage caused by frozen coils are not covered under warranty.

HRV and Fresh air connections

Fresh air and HRV connections to ductwork can pose a risk of dumping cold air into ductwork during periods of stand-by or continuous run. Calculate mixed air stream temperatures and provide interlock controls to prevent freezing conditions.

Attic and crawl spaces

Air handlers may be located in areas subject to freezing conditions. It is

necessary to protect the water coil (if present) and condensate drain from freezing.

Condensate traps contain water year-round.

ELECTRICAL

Warning! - Make sure unit is properly grounded. Locate air handler on a separate electric circuit, or use the same circuit as the water heater or boiler.

Air handler wiring diagrams are located on the blower or door for easy reference during installation and servicing. Nameplate data is located on the side of the unit.

All air handlers operate on 115VAC/1ph/60hz line voltage. Other voltages are available as special order. All control circuits are 24 VAC. One leg of the 24 VAC is grounded to the chassis.

Heat Pump

Use R, O, Y, W(optional) and C on the air handler terminal strip to connect the heat pump according to heat pump instructions. For 2-stage heat pumps, remove the factory jumper at Y1&Y2 and connect Y1 and Y2 from the heat pump. **Warning:** If the heat pump has its own transformer, it must be isolated from the low voltage power supply of the air handler.

Thermostat

DXAH™ air handlers are compatible with most standard heat pump thermostats including 2-stage. Use a 2-stage thermostat with 2-stage heat pumps.

Heat Anticipator Setting

For optimum comfort the anticipator setting should be set to provide approximately 4 cycles per hour

Thermostat wires from the thermostat are connected to screw terminals located inside the air handler. The thermostat should be connected as follows:

R – power (24vac)
W1 – aux. heating (medium) or
W1+W2 – aux. heating (high)
Y1– heat pump heat/cool (low) or
Y2– heat pump heat/cool (medium) or
Y1+Y2 – heat pump heat/cool (high)
O—heat pump reversing valve (cooling)
G – continuous run fan
C -- ground

Connect the thermostat to the appropriate screw terminal according to the chart within the air handle cabinet. The one below is for reference only. Heating (Y) is approx. 420cfm/ton; cooling (Y+O) is approx. 360cfm/ton.

Dehumidistat

The dehumidistat must be 24VAC, open on humidity rise. Remove the jumper between DEHUM and R. Connect to DEHUM (right side) and R terminals.

Boiler

If ordered with optional hydronic auxiliary heat, the yellow wires labeled TT on the relay are dry contacts for connection to a boiler or external pump.

Electric Duct Heater

The standard isolating relay in the air handler is dry contact intended for low voltage/low current from the electric duct heater.

Airflows in cfm – subject to change without notice, refer to inside door or blower of air handler.

EC motor airflows (cfm)

Air Handler	DXAH18	DXAH36	DXAH60	DXAH72
EC Motor Program	HP030A31	HP060A31	HP100A32	HP120A41
DEHUM jumpered to R is factory default (A)				
G	405	619	990	1312
Y1	420	840	1260	1787
Y2	630	1050	1440	2098
Y1+Y2	840	1200	1800	2400
O+Y1+DEHUM	360	720	1260	1619
O+Y2+DEHUM	540	900	1440	1901
O+Y1+Y2+DEHUM	720	1080	1800	2183
O+Y1	288	576	1008	1379
O+Y2	432	720	1152	1619
O+Y1+Y2	576	864	1440	1859
W1 (aux)	600	900	1350	2004
W2 (aux)	800	1200	1800	2400
XLC* jumpered to R (not factory default) (D)				
G*	270	495	990	1104
Y1*	280	672	1470	1530
Y2*	420	840	1680	1797
Y1+Y2*	560	1008	2100	2064
O+Y1+DEHUM*	240	576	1260	1363
O+Y2+DEHUM*	360	720	1440	1600
O+Y1+Y2+DEHUM*	480	864	1800	1838
O+Y1*	192	461	1008	1159
O+Y2*	288	576	1152	1360
O+Y1+Y2*	384	691	1440	1562
XLH** jumpered to R (not factory default) (D)				
W1 (aux)**	600	900	1350	1600
W2 (aux)**	800	1200	1800	1925

Any call on W1 or W2 takes precedence over Y1 and Y2.

Removing DEHUM jumper will reduce all **cooling** airflows by 15%

For 2-stage systems, Y1 is first stage, Y1+Y2 is second stage

PROFILE -- When connected to R (not factory default), will run any Y call at 13% for 45 seconds, 50% for 15 minutes and 100% for the remainder of the t'stat call. Recommended for water-based systems connected to storage tanks or variable DX systems.

Contact the factory for other air flows.

START-UP PROCEDURES

Follow heat pump manufacturer start up procedures.

For the air handler, ensure thermostat and heat pump low voltage is properly wired to it, power is on, door is on and filter/filter door are in place.

Auxiliary Water Coil
Do not start the air handler or water heater until ALL air has been purged!

1.Fill the loop with water (or water glycol), but do not start it.

2.Purge all air from the boiler/water heater system.

3.Purge all air from the air handler loop by closing the isolation valve on the return leg of the loop and open the drain to purge air. Open the return leg isolation valve and then close the drain valve.

4.Turn on the power to the air handler and start the heat pump according to the manufacturer's instructions. If a buffer tank is used, set the tank temperature and wait for it to reach temperature.

5.Set the room thermostat to energize the fan and pump. If a gurgling sound is present, it should subside within one minute. If noise is still present after one minute, repeat step 3 to purge air as necessary.

6.Check pipes to make sure there is flow.

SERVICE AND MAINTENANCE

Filter
The filter should be inspected monthly and replaced as required.

Duct cleaning
If proper filter maintenance is adhered to, duct cleaning will not be required for the life of the equipment.

Coils
Air conditioning and heating coils should not require cleaning if the filter maintenance schedule is adhered to. If a filter is damaged or collapses from plugging, dust may foul the coils. If this happens, replace the filter and carefully vacuum the coils. The fan may need to be removed to gain access to the face of the coil.

Drain pan
At the start of each cooling season, check the drain connection to the cooling coil to ensure it is free of debris. If a plugged coil is suspected, call a service technician for testing and cleaning

Fan and motor
Check fan for dust once a year. If dirty, vacuum to remove dust. Keeping the fan blades clean will reduce noise and improve the capacity and efficiency of the heating system

Pump (optional hydronic coil)
The circulating pump is water lubricated and should require no regular maintenance. The system control may have an optional cycle timer to exercise the pump even during prolonged periods of no heat to avoid seizing from long idle periods.

Thermostat Call Error

First, review "How It Works" on page 7 for normal operation. It is normal for the fan to change speeds.

If there is a call for the heat pump (Y) and a call for auxiliary heating (W) at the same time, the auxiliary speed will be selected **and** the heat pump will operate as well as aux. heat will come on. Wiring or thermostat errors could also cause cooling (Y+O) and aux. heat (W) to operate at the same time. Check the thermostat for correct wiring.

Improper Operation/Fan Speed

Room thermostat or heat pump may be connected improperly. Refer to Electrical section or wiring schematic on door of air handler for proper installation. Test by disconnecting heat pump and thermostat at the air handler. Test air handler by jumpering t'stat connections one at a time. Systematically reconnect t'stat then heat pump wires.

With power off to the air handler check for lose wires at the terminal strip and connections to the motor.

(optional) Auxiliary Pump does not run

After prolonged idle periods, the pump may "stick" and fail to run. Often, closing the isolation valve on the return leg and opening the drain port so that water flows through the pump can free this. If this fails to free the pump, removal for cleaning or replacement is necessary. The optional daily pump exerciser may prevent pump sticking.

Pump is noisy at start-up

Air is present in heating loop. If sound has not diminished within 1 minute, purge air in accordance with the *Start-Up* procedures. If heat source is a water heater, check to make sure branch connections for heating loop are horizontal to prevent the collecting of air in the heating loop. See the drawing: Typical Plumbing Connections at the front of this manual.

Insufficient or no heating or cooling

- Plugged air filter or coil. Refer to *Maintenance* section for filter care and coil cleaning.
- Refer to heat pump manufacturer's guide for proper faults, set-up, operation and refrigerant charge. Note that the air handler, heat pump and auxiliary electric heater are on separate circuit breakers.

Motor "Thumps" On Start-up

This is a normal characteristic of EC motors.

SERVICE TIPS

WARNING!
Servicing should only be performed by authorized personnel. Improper service work may result in equipment damage and personal injury.

NOTE: Disconnect power supply before servicing. Shut off isolation valves and drain water before performing any plumbing work. Use a suitable drip pan/rags to protect the controls/motor from water.

Once defective parts have been identified this section is a guide for removal and replacement.

Vortex air handlers are designed to be fully serviced from the front.

Auxiliary Pump Replacement

Small pumps (soldered in place) – only if there is a leak in the rear section of the pump would it need to be unsoldered. Normally, only the motor needs replacing. Disconnect wires, undo the four allen screws in front. Replace the motor assembly.

Pumps with unions of flanges – remove and replace entire pump or change only the motor as described above.

Check Valve Replacement

The check valve is inside the outlet of the pump. Remove the pump or pump union to gain access.

Coil Replacement

Auxiliary Coil – Disconnect pump wires, disconnect plumbing and remove six screws from front of panel. Support coil from below while removing. Slide entire coil assembly forward on its rails. Replace coil or entire assembly.

Cased External Coil (DXAH18/DXAH24/36) – Evacuate and disconnect copper and remove all (four or eight) screws from front of panel. Remove any accessible screws from the side panels. Front flanges on these side panels may have to be bent out of the way. Slide coil out the front. Replace coil.

Main Coil (DXAH60/72) – Remove lower blower panel and main coil panel. Unscrew plumbing cover plate. Disconnect drain. Evacuate and disconnect copper. Slide coil and drain pan out and replace.

Motor Replacement

All controls , motor and fan are accessible through the lower panel. The complete fan/motor/control assembly can be removed with three screws. Disconnect power and control wires. Support the blower from below while removing the three (2 for DXAH18) screws at the top of the blower. The rear of the blower is hooked at the back. Lower the complete assembly (front first) and pull forward. Replace the motor or complete assembly as required.

HPAH AIR HANDLER PARTS & ACCESSORY LIST

Part No.	Description	DXAH18/ DXAH24	DXAH36	DXAH60	DXAH72
UC16163DX	DX Coil -- 16”x16”	S			
UC20183DX	DX Coil – 20”x18”		S		
call	DX Coil – A-coil			S	S
UC12163	Water Coil -- 12”x16”	X			
UC20203	Water Coil – 20”x18”		X	X	X
GUPS15-58RU	Pump- Grundfos	X	X	X	X
XELR024DPDT	Aux. Relay 24VAC	S	S	S	S
XELR01TIMER	Cycle Timer/Pump Exerciser	O	O	O	O
XELT002	Transformer 24VAC, 40 VA	S	S	S	S
XELD002	Door interlock switch	S	S	S	S
XECM03E	EC Blower motor -- 1/3 HP	S	S		
XECM04E	EC Blower motor -- 1/2 HP		A		
XECM06E	EC Blower motor -- 3/4 HP			S	
XECM08E	EC Blower motor -- 1 HP				S
XBLF105T	Blower – 10x5T DD	S			
XBLF108	Blower – 10x8 DD		S		
XBLF128T	Blower – 12x8T DD			S	S
CPVA	Valve Assembly – ¾” full port sweat ball valves plus hose bib for return	O	O	O	O

S=Standard, A=Alternate, O=Option or Accessory, X=for Auxiliary hot water coil

PRODUCT WARRANTY

This product is warranted by Vortex Source Systems to be free from defects in materials and workmanship that affect product performance under normal use and maintenance within the applicable periods specified below. Replacements furnished will carry only the un-expired portion of the original warranty.

Two-Year Parts

Vortex Source Systems will provide replacement parts for ANY part that fail within two years of purchase, subject to the **terms** below.

Five-Year Parts

Vortex Source Systems will provide replacement parts for any heating coils, cooling coils, cabinetry and piping that fail within five years of purchase, subject to the **terms** below.

Terms

- Reasonable proof of original purchase date must be provided in order to establish the effective date of the warranty, failing which, the effective date will be based on the date of manufacture plus thirty days.
  The warranty does not cover failure or damages caused by:
  - improper installation or operation
  - accident, abuse or alteration
  - operation of device at temperatures or pressures outside of the rated capacities
  - lime or scale deposits
  - corrosive operating environment
  - equipment moved from original installation location
- Replacements furnished under this warranty will be F.O.B. Vortex Source Systems product distribution points in the United States and Canada. They will be invoiced at regular prices. The account will be credited the full amount when the defective part is received by Vortex, examined and approved as a valid warranty.
- Warranty applies to the original purchaser, but may be transferred to another owner provided the equipment is not moved from the original installation site.
- This warranty does not apply to labour, freight or any other cost associated with the service repair or operation of the product.
- Vortex shall not be liable for any direct, special, incidental or consequential damages caused by the use, misuse, or inability to use this product.
- Vortex is under no legal obligations to rectify, including but not limited to, lost profits, downtime, good will, damages to, or replacement of equipment and property
- Purchaser assumes all risk and liability of loss, damage or injury to purchaser and purchaser's property and to others and their property arising out of the use, misuse or inability to use this product.

.